Interval-based Clock Synchronization for Ad-Hoc Sensor Networks

Lennart Meier

Computer Engineering and Networks Laboratory
ETH Zurich

ETH
Eidgenössische Technische Hochschule Zürich
Swiss Federal Institute of Technology Zurich

Motivation

message-delay uncertainty

specific communication pattern for synchronization

clock drift

sensor nodes

sensing areas

dynamic structures

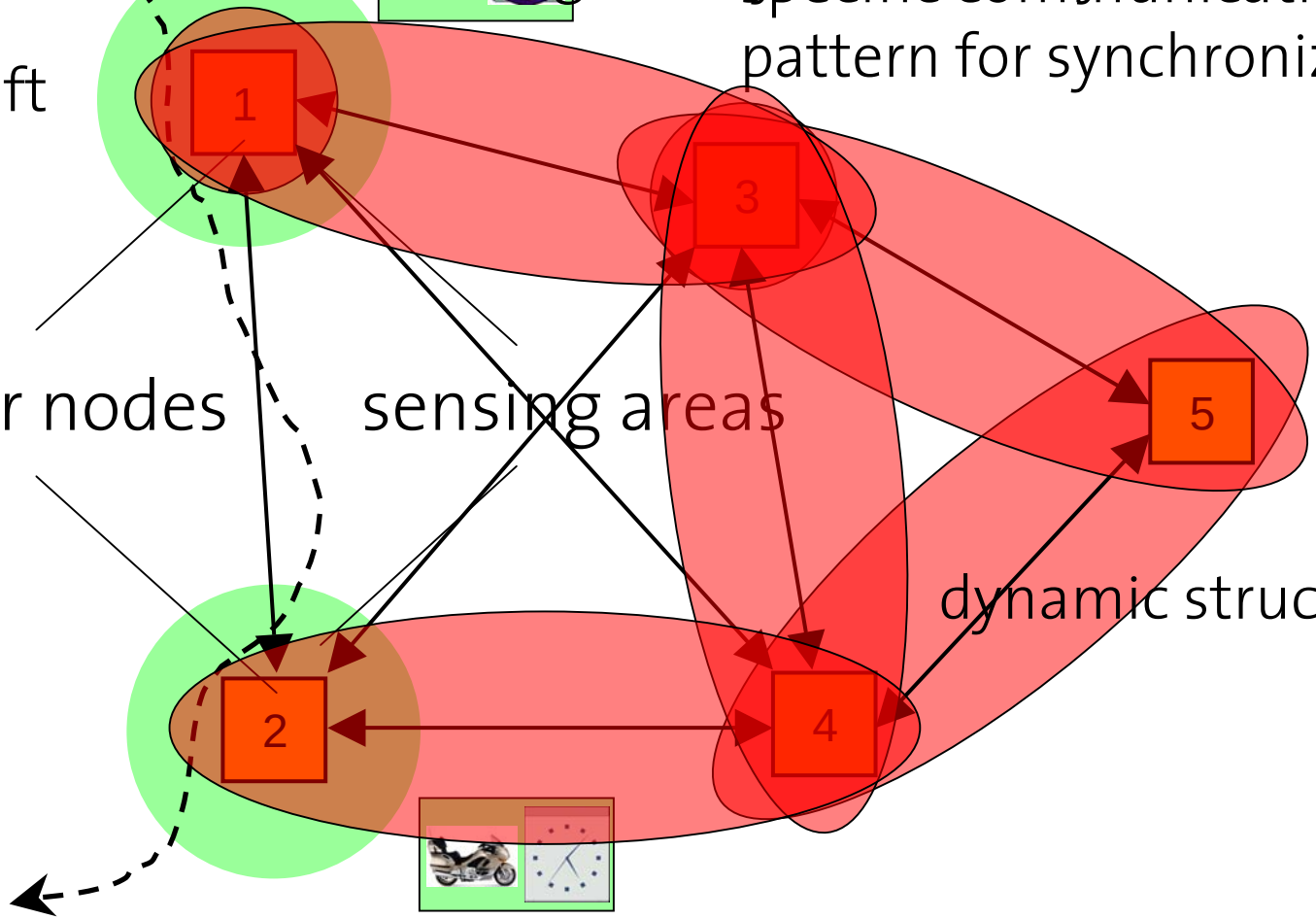

Related Work

- Clustering
- J. Elson, L. Girod, and D. Estrin. Fine-grained network time synchronization using reference broadcasts. In *Proceedings of the Fifth Symposium on Operating Systems Design and Implementation (OSDI 2002)*, 2002.
- Tree construction
- S. Ganeriwal, R. Kumar, and M. B. Srivastava. Timing-sync protocol for sensor networks. In *Proceedings of the First ACM Conference on Embedded Networked Sensor Systems (SenSys)*, 2003.
- M. L. Sichitiu and C. Veerarittiphan. Simple, accurate time synchronization for wireless sensor networks. In *IEEE Wireless Communications and Networking Conference (WCNC'03)*, 2003.
- J. van Greunen and J. Rabaey. Lightweight time synchronization for sensor networks. In *2nd ACM International Conference on Wireless Sensor Networks and Applications*, pages 11–19, 2003.

Overview

- Goal: Synchronization in ad-hoc sensor networks with *arbitrary* communication patterns.
- Claim: *Interval-based* synchronization is particularly suited.
- Recent results on interval-based synchronization.

Interval-Based Synchronization of Drift-Constraint Clocks

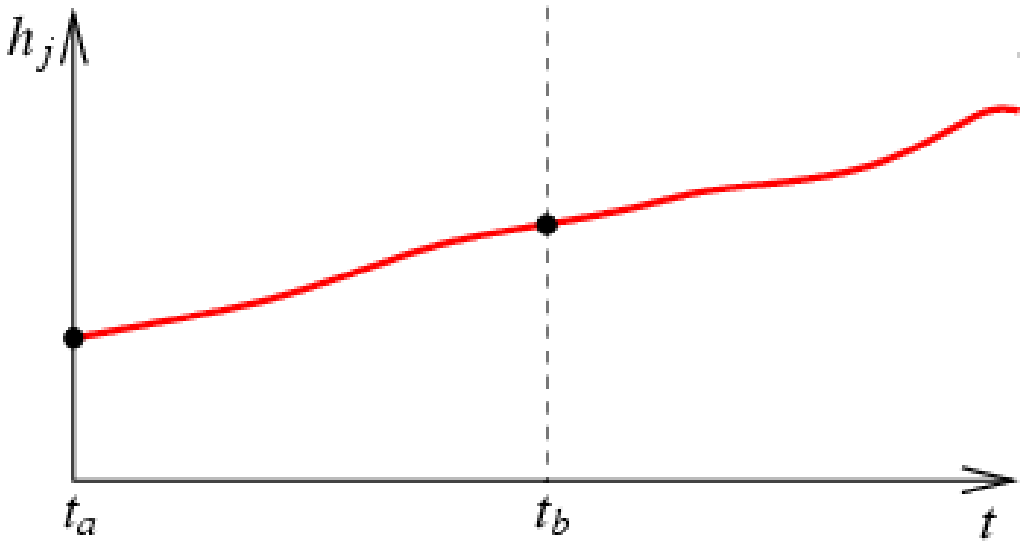

$$\rho_j(t) = \frac{\mathrm{d}h_j(t)}{\mathrm{d}t} - 1$$

$$-\widehat{\rho}_j \leq \rho_j(t) \leq +\widehat{\rho}_j$$

K. Marzullo and S. Owicki: *Maintaining the Time in a Distributed System*, PODC 1983.

Advantages of Interval-Based Synchronization

ptimal combination of time information.

o particular communication pattern.

uaranteed bounds on fused sensor data.

- Concerted actions guaranteed to succeed.

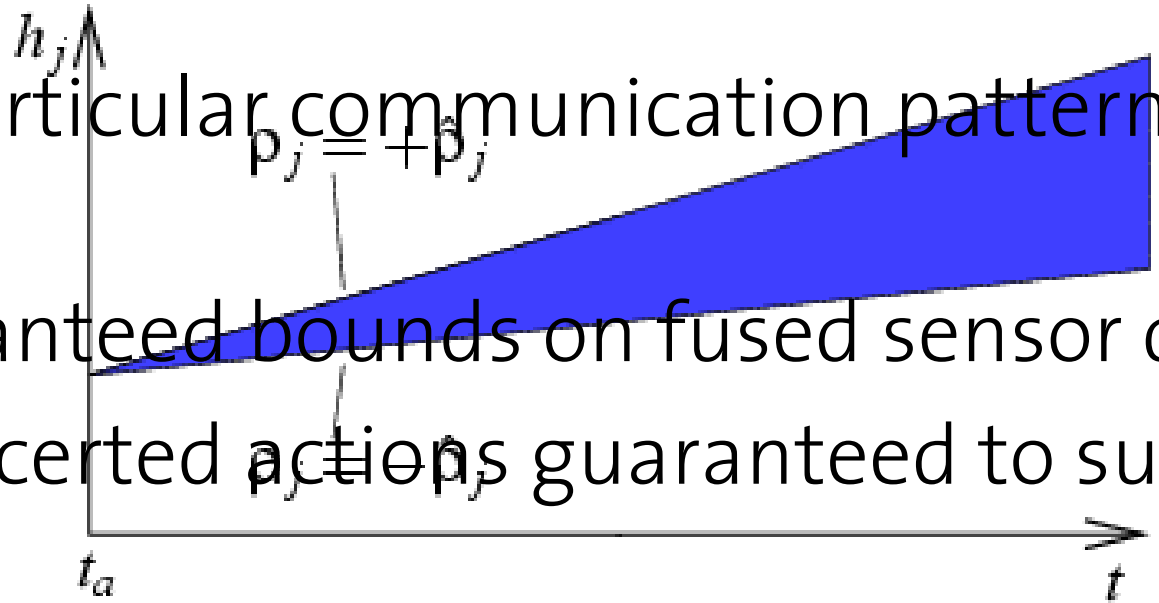

Internal Synchronization

Given the local time $h_j(t_s)$ of node N_j at real time t_s, find tight bounds on the local time $h_i(t_s)$ of another node N_i at time t_s.

$$H_i^l(t_s) = h_i(t_a) + \frac{h_j(t_s) - h_j(t_a)}{1+\hat{\rho}_j}(1-\hat{\rho}_i)$$

$$H_i^u(t_s) = h_i(t_a) + \frac{h_j(t_s) - h_j(t_a)}{1-\hat{\rho}_j}(1+\hat{\rho}_i)$$

$$H_i(t_s) = ?$$

Instantaneous message exchange.

No delay uncertainty.

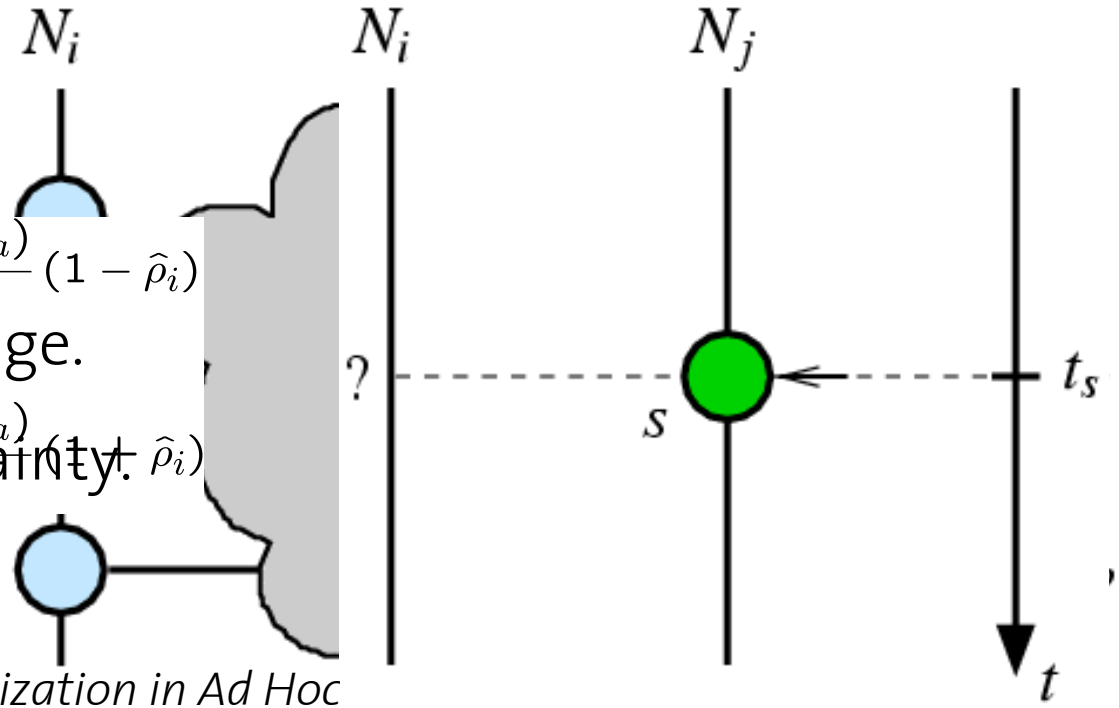

K. Römer, *Time Synchronization in Ad Hoc*

Recent Results: Improved Synchronization

- Simply intersecting current bounds is worst-case-optimal.
- In the average case, previous bounds (the "back path") enhance synchronization.

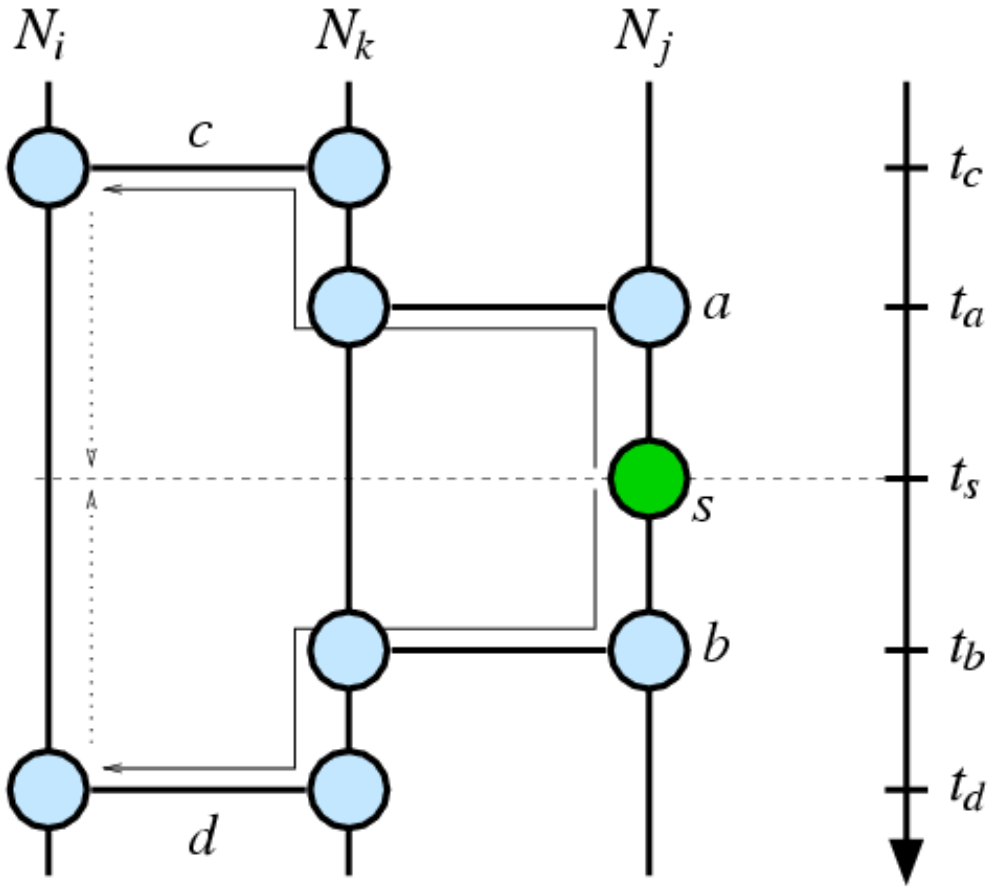

P. Blum, L. Meier, and L. Thiele: *Improved Interval-Based Clock Synchronization in Sensor Networks*, IPSN'04.

Recent Results: Improved Synchronization

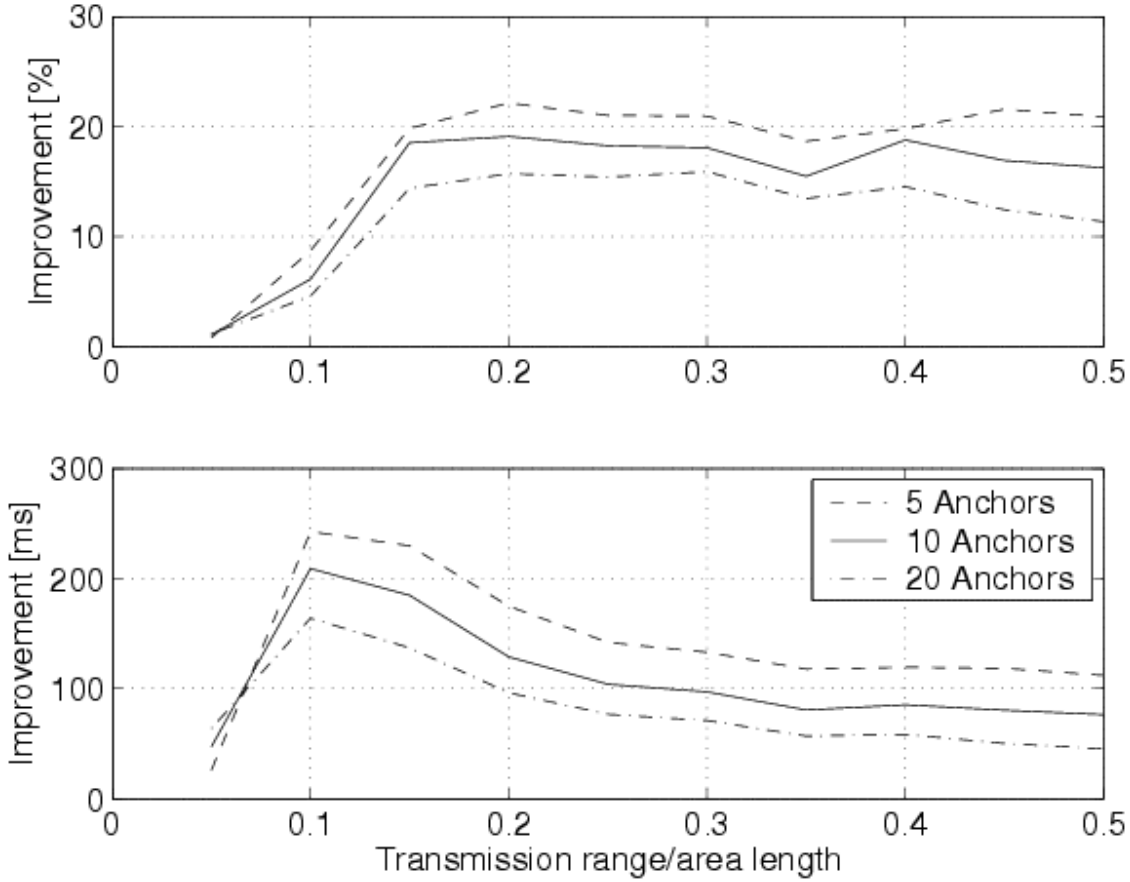

P. Blum, L. Meier, and L. Thiele: *Improved Interval-Based Clock Synchronization in Sensor Networks*, IPSN'04.

Recent Results: Optimal Synchronization

- Arbitrary scenarios: traverse all paths and choose best bounds.
- No algorithm can do better.
- Need to store and exchange complete histories of all nodes.

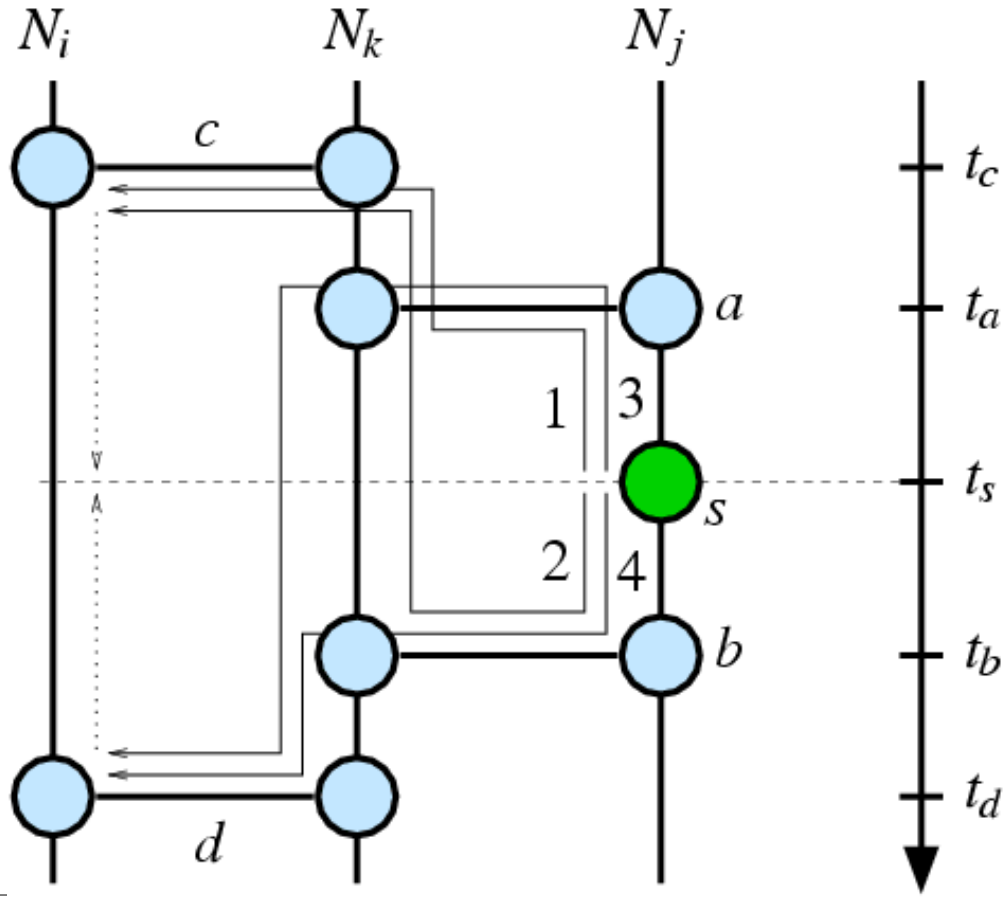

L. Meier, P. Blum, and L. Thiele: *Internal Synchronization of Drift-Constraint Clocks in Ad-Hoc Sensor Networks*, MobiHoc 2004.

Is it practical?

- The optimal algorithm is too expensive.
- Trade off

  history size vs. synchronization quality.
- Store only recent events.

Conclusion

Interval-based synchronization

- needs no particular communication pattern
- provides guaranteed bounds on fused data
- guarantees success of concerted actions

- and hence is particularly suited for ad-hoc sensor networks.

Open Questions

- Ideal history size.
- Mobile nodes.
- Node density and connectivity.
- Faulty or misbehaving nodes.

Thank you.

Interval-based
Clock Synchronization
for Ad-Hoc Sensor Networks

Lennart Meier

Computer Engineering and Networks Laboratory
ETH Zurich